197348 Russia, Saint Petersburg, Road to Kamenka, 64 building 1,
Tel: +7 (812) 500-89-97, E-mail: info@ecogentech.ru, https://ecogenthermoelectric.com/

SPECIFICATION OF THERMOELECTRIC COOLING ASSEMBLY 380-24-AA v1

Thermoelectric parameters	*Unit*	*Value*
Operating voltage (U)	**V**	**24**
Operating current (I)	**A**	**10.4**
Operating cooling power (Qc)*	**W**	**220**
Tolerance	**%**	**±10**

Operational parameters	*Unit*	*Value*
Working temperature range	**°C**	**-10 ÷ +70**
Weight	**kg**	**6.8**

Parameters of fans		*Unit*	*Value*
Fan quantity	**Hot side**	**-**	**2**
	Cold side	**-**	**1**
Electrical parameters		**V/A**	**24/0.25**

* Operation cooling power corresponds to zero difference temperature between cold radiator and the environment with temperature of 27°C

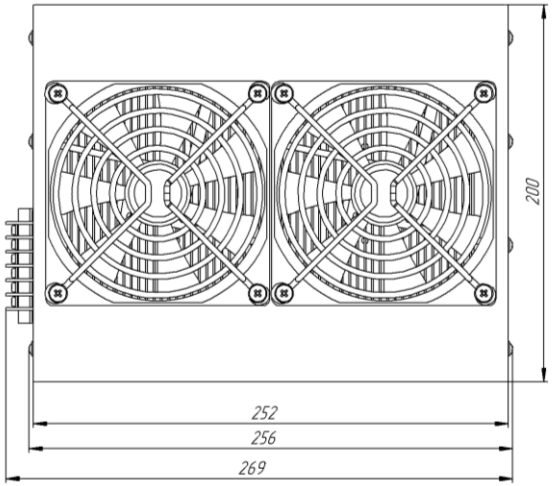

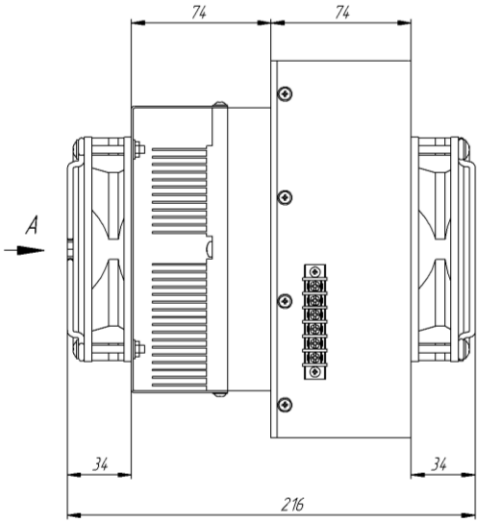

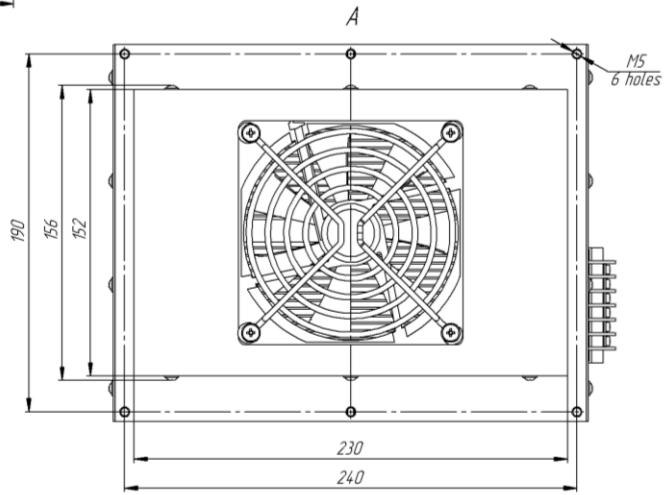

Terminal block connection

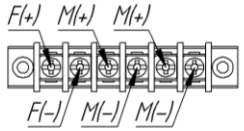

F – fan
M – thermoelectric module

Load curve

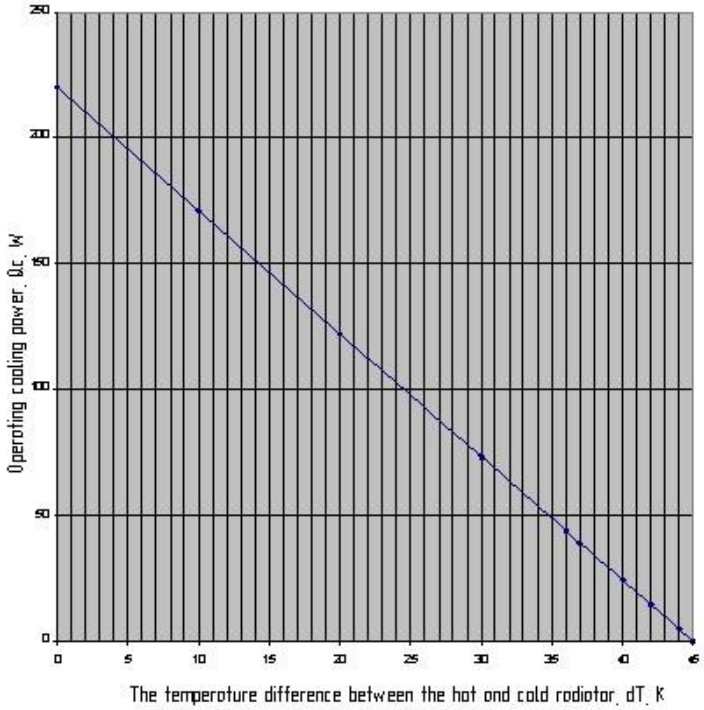

ECOGEN

CUSTOMER